Brewista®

Scan for video

Smart Brew™ 3 Cup Hourglass Brewer

BRWHG3C

Features:

- Vent tube ensures consistent brewing (patent pending)
- Tempered borosilicate glass
- Thick, protective silicone wrap
- Dual pour spouts for smooth serving
- Interior ribs prevent filters from sticking
- Perfect for brewing 1 to 3 cups
- Works with virtually any style #2 coffee filter!

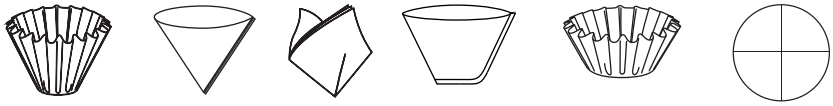

Tall basket | Full cone | Square | Flat V cone | Standard basket | Circular

MSRP: $32.95 USD †

contact sales@mybrewista.com to order

BPA FREE

DISH-WASHER SAFE

†All prices subject to change.

Smart Brew™
3 Cup Hourglass Brewer

Brewista's revolutionary redesign of the classic hourglass brewer works with virtually any style paper filter; square, full cone, flat V cone, circular and standard or tall basket styles. You can use the filters of your choice. The patent pending vent tube and ribbed interior make it possible. Together they prevent the vacuum which leads to overflow during the bloom. The ribs also keep filters from sticking when wet, so removing grounds is simple and neat when you are ready to pour. An innovative dual spout design provides smooth serving without splashing. The ergonomically designed profile and non-slip, heat resistant silicone wrap make it easy to handle. Durable tempered borosilicate glass maintains temperature without cracking under quick temperature changes.

Brewista®

1133 W. 27th Street, Cheyenne, WY 82001, USA | www.mybrewista.com
Toll Free in North America: 1-888-538-8683 | Local: 307-222-6086 | sales@mybrewista.com

Copyright © Brewista Inc. 2018

Brewista®

BRWHG3C

6 45240 81276 3

Smart Brew™ 3 Cup Hourglass Brewer

BRWHG3C

Parts and Materials:

- Body:
  Tempered borosilicate glass
- Grip:
  BPA free silicone

Dimensions:

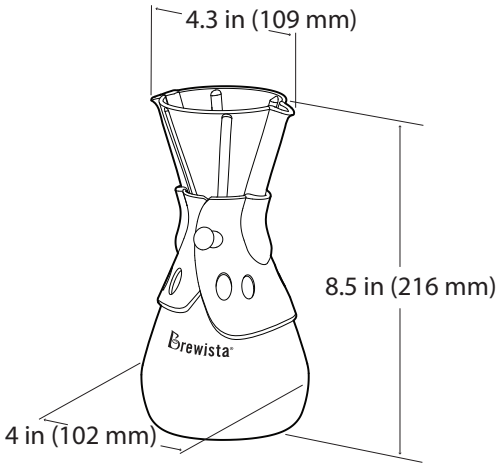

Shipping Information:

Product box dimensions

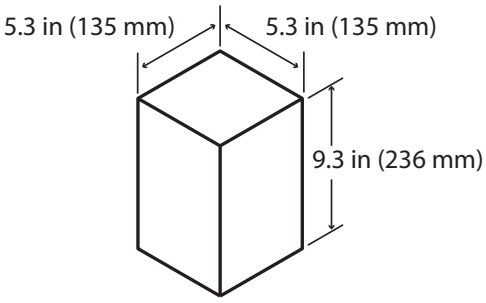

Shipping carton dimensions
(6 pieces per carton)

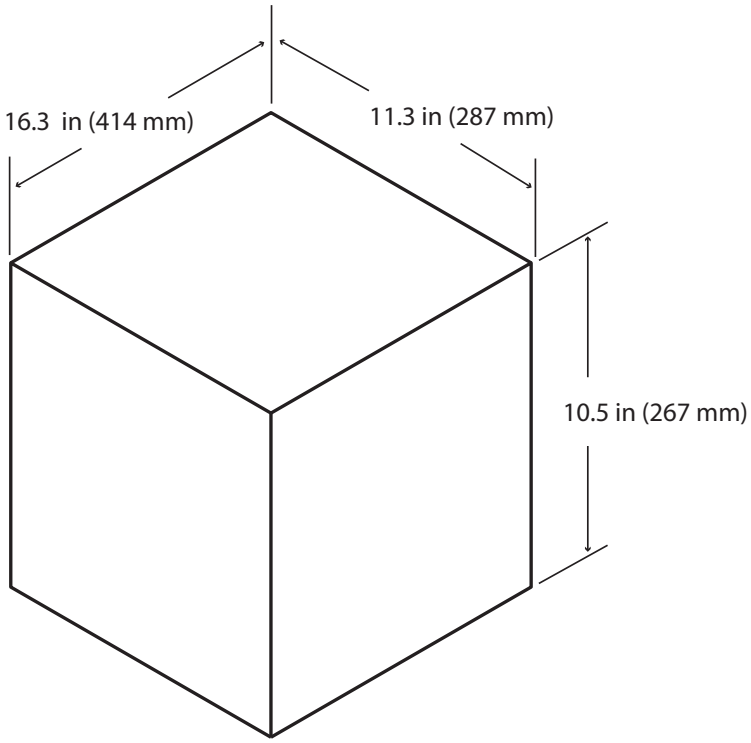

Copyright © Brewista Inc. 2018